DRESSER
NATURAL GAS SOLUTIONS

RCS and Andco Actuators

DeviceNet™ Electric Actuator Controller

Model:
CDN460-DNET115V
115 VAC actuator models

Document: CDN460-DNET115V Operations Manual
Revision 02, June, 2002

RCS™

ANDCO™

Table of Contents

Introduction 3
Features 3
Hardware Specifications 3
Network Communication Protocols 3
Analog Inputs Specification 3

Configuration Switches 4
Address Switches SW1 and SW2 4
Calibration Switches S1 and S2 4
Configuration Jumpers 4
Actuator LED Indications 4
Terminal Blocks 4

Figure 1, DNET115V Layout 5

Calibration Procedure 6
Potentiometer Calibration 6

Functional Specifications 8
Data Base 8
Actuator Status Mapping 8
Actuator Alarm Mapping 8
DI ImageO Mapping 8
Command Word Mapping 8
Control Word Mpping 8
Emergency Shutdown (ESD) 8

Position scaling 9
DeviceNet Device Profile 9
Identity Object: Class Code: 01(0x01) 9
Identity Object Class Attributes 9
Identity Object, Instance 1 Attributes 9
Common Services 9
Router Object: Class Code: 02 (0x02) 9
Router Object Class Attributes 9
Router Object, Instance 1 Attributes 9
Common Services 9

DeviceNet Object: Class Code: 03 (0x03) 10
DeviceNet Object Class Attributes 10
DeviceNet Object, Instance 1 Attributes 10
Common Services 10
Assembly Object: Class Code: 04 (0x04) 10
Assembly Object, Instance 1 Attributes 10
Assembly Object, Instance 2 Attributes 10
Common Services 10

Connection Object: Class Code: 05 (0x05) 11
Connection Object Class Attributes 11
Connection Object, Instance 1 Attributes (Explicit Message) 11
Connection Object, Instance 2 Attributes (POLL connection) 11

Common Services 12
User Object (UC): Class Code: 64 (0x40) 12
VCO Object Class Attributes 12
VCO Object, Instance 1 Attributes 12
Common Services 12
RCS Actuator Connection Drawing 13
Andco Connection Drawing 14

1 Electric Actuator Controller, DNET115V.

1.1 Introduction

The DNET115V is an actuator control module designed to meet the specific performance requirements of the RCS/ANDCO electric actuators. The module is an integral part of the electric actuator.
The DNET115V provides actuator open/stop/close control, Emergency Shutdown (ESD), end of travel limit switch status, fail to open alarm, and fail to close alarm, via the DeviceNet bus. The module will switch the control power to an electric motor, solenoid, or contactor, by the use of two triacs.
The DNET115V electronic circuitry is powered by the 24 Vdc supply provided by the DeviceNet bus.

1.2 Features

- Open/Stop/Close output control to the actuator
- Open/Close limit switch indication through internally sourced current sensing digital inputs
- Configurable: Drive Open / Drive Closed / Stay-put / Emergency Shut Down commands via the DeviceNet network.
- Failed to achieve Open or Close Alarms
- LED status indicators for local diagnostics
- Configurable address via the DeviceNet network, or on-board DIP switch
- "Plug In" style electrical terminal blocks

1.3 Hardware Specifications

Operating Temperature:	-20 to + 70 C
Storage Temperature:	-40 to + 80 C
Humidity:	90% Non Condensing
Supply Power:	1.5W @ 24Vdc
Solid State Outputs:	(2) Isolated 600VAC 15A
Digital Inputs:	(8) Dry Contacts
Analog Inputs:	(2) Channels (see below)
Processor:	Temic 89C51CC01
RAM:	1K
Flash Memory:	32KB
EEPROM:	32KB
Physical Dimensions:	4.00” x 2.78” x 1.50”
Serial Interfaces:	One CAN 2.0 port.

1.4 Network Communication Protocols

Module supports DeviceNet Group 2 Slave

1.5 Analog Inputs Specification

Resolution:	8bit
Accuracy:	1% of full span (FS).
Linearity:	1% of FS.
Temperature Drift:	2% of FS.
Range:	0 to 5Vdc or 0 to20mAdc input for Analog Input 1 (AI1)

1-5KΩ Potentiometer for the Position Feedback.

1.6 Configuration Switches

1.6.1 Address Switches SW1 and SW2, See Figure 1

Three 16-position DIP switches determines the boards Address and Baud rate:

- MSB selects the high nibble of the Address.
- LSB selects the low nibble of the Address.
- DR selects the Data Rate. 0-125K, 1-250K, 2-500K, 3> - Non Volatile

Note: For DeviceNet, Address values greater than 63 would use address in non-volatile memory.

1.6.2 Calibration Switches, See Figure 1

S1 – Sets the Close Position for RCS Actuators
Sets the Retract Position for Andco Actuators

S2 – Sets the Open Position for RCS Actuators
Sets the Extend Position for Andco Actuator

When the calibration switches are depressed, two of the three Status LEDs will turn ON, indicating that the push button is depressed. After the push button has been depressed for approximately five seconds, the LEDs will return to their previous state indicating that the action has been performed.

1.7 Configuration Jumpers, see Figure 1

JP1 Installed: Connect DeviceNet Shield to Chassis via a High pass filter.
JP2 Installed: Set board in Program Mode
JP2 Not Installed: Normal Operation

1.8 LED Indications, see Figure 1

LED	Description		
M	DeviceNet Module LED: Green		DNET115V module ok
		Red	DNET115V module error
N	DeviceNet Network LED: Green solid		Network communicating with recognized device, network communication O/K
		Green blinking	Network communicating with unrecognized device (Check EDS file)
		Red	No network communication, check network wiring
A	Actuator Status:		
	Red/Green		Actuator Stopped in mid travel.
	Flashing Green		Actuator moving toward full closed (RCS actuators) or retract (Andco actuators) position.
	Solid Green		Actuator at the full closed (RCS actuators) or retract (Andco actuators) position.
	Flashing Red		Actuator moving toward full open (RCS actuators) or extend (Andco actuators) position.
	Solid Red		Actuator at the full open (RCS actuators) or extend (Andco actuators) position
D9	Triac Output Status:	Solid Green	Close/retract command active
		Off	Actuator stopped or no command received over the network
D10	Triac Output Status:	Solid Red	Open/extend command active
		Off	Actuator stopped or no command received over the network

1.8 Terminal Blocks, see Figure 1

J3 DeviceNet	J1, J2 Digital Inputs	J4 Actuator Outputs	J5 Analog Inputs	J6 Feedback Potentiometer	J11 Download
J3-5: DeviceNet V+	J1-7: DI1 J2-5: D15	J4-1: Actuator Power	J5-1: In+	J6-1: CW	J11-1: RXD
J3-4:DeviceNet CanH	J1-6: DI2 J2-4: D16	J4-2: Actuator Power	J5-2: In-	J6-2: Slider	J11-2: TXD
J3-3:DeviceNet Shield	J1-5: GND J2-3: D17	J4-3: Actuator Open		J6-3: CCW	J11-3: GND
J3-2:DeviceNet CanL	J1-4: DI3 J2-2: D18	J4-4: Actuator Close			
J3-1:DeviceNet V-	J1-3: GND J2-1: GND	J4-5: Actuator Cmn	Not available		
	J1-2: DI4	J4-6: Actuator Cmn	yet. Future		
	J1-1: GND		development.		

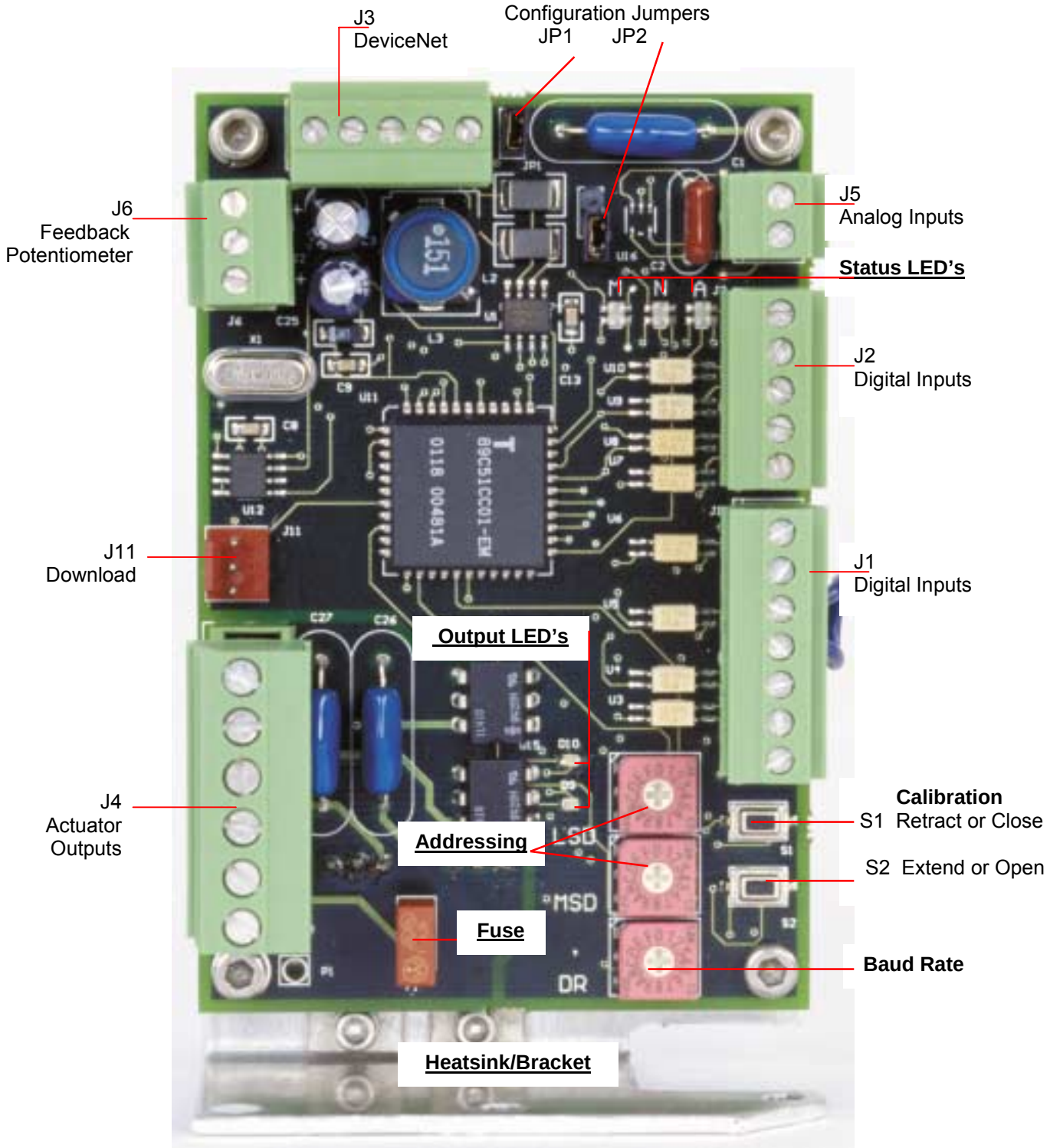
J3
DeviceNet
Configuration Jumpers
JP1 JP2
J6
Feedback
Potentiometer
J5
Analog Inputs
Status LED's
J2
Digital Inputs
J11
Download
J1
Digital Inputs
Output LED's
J4
Actuator
Outputs
Addressing
Calibration
S1 Retract or Close
S2 Extend or Open
Fuse
Baud Rate
Heatsink/Bracket

Figure 1

1.9 Calibration Procedure

a. Installation Notes

Note 1*:** *The following instructions assume that the DNET115V board is installed in the actuator and all safety, installation and startup instructions outlined in the appropriate RCS and ANDCO actuator installation and instruction manuals have been carried out.* ***Be certain the actuator is in proper operating condition before attempting to calibrate the DNET115V board.

Note 2: *The terms "clockwise" and "counterclockwise" refer to the direction of rotation of the actuator output shaft, for rotary actuators, as viewed from the top of the actuator. For linear actuators, the term "extend", rod moving away from the body of the actuator, and "retract", rod moving into the body of the actuator, refer to the direction of movement of the extension rod.*

b. Potentiometer Calibration

1. Move the actuator to 50% of full travel. Remove the potentiometer slider wire from terminal point 1 on terminal strip J6 and the potentiometer minimum signal wire from terminal point 2 on J6.
2. Using an ohmmeter, measure the resistance between the two wires. The meter reading should be 500 Ohms. If not, loosen the setscrew on the potentiometer pinion gear and adjust the shaft until the reading is 500 Ohms.
3. Tighten the setscrew.
4. Move the actuator to the full closed (RCS actuators) or retract (Andco actuators) position. Use the ohmmeter and measure the resistance between the two wires once again. The reading should be approximately 20 Ohms. Connect the minimum signal wire to terminal point 1 of J6.

   Note: *If the resistance measured at this step is greater than 500 Ohms, the minimum and maximum potentiometer leads are reversed. Remove the remaining potentiometer lead from terminal point 3 of terminal strip J6 and measure the resistance between it and the slider wire. The reading should be approximately 20 to 50 Ohms. Terminate this lead to terminal point 1 of J6. Connect the other lead (not the slider) to terminal point 3 of terminal strip J6.*

5. Move the actuator to the full open (RCS actuators) or extend (Andco actuators) position. Remove the maximum signal potentiometer lead from terminal point 3 of terminal strip J6. Use the ohmmeter and measure the resistance between it and the slider wire. The reading should be approximately 900 to 950 Ohms.
6. Reconnect this lead to terminal point 3 of terminal strip J6.
7. Reconnect the potentiometer slider wire to terminal point 2 of terminal strip J6.

c. Calibrating the DNET115V

1. Electrically, move the actuator toward the full closed (RCS actuators) or retract (Andco actuators) position.

   Note: *If no local pilot devices are available, this may be accomplished by installing a jumper between terminal point 6 and terminal point 4 of terminal block J4. This will run the actuator to the full* closed (RCS actuators) or retract (Andco actuators) position.

   As the actuator is moving the LED's on the DNET115V should give the following indications:
   - M: Solid Green
   - N: Solid Green
   - A: Flashing Green
   - D9: Solid Green
   - D10: Off

   When the end of travel is reached and the limit switch activates, the actuator will stop and the LED's will give the following indications:
   - M: Solid Green
   - N: Solid Green
   - A: Solid Green
   - D9: Solid Green
   - D10: Off

2. Push down and hold S1 on the DNET115V. The LED's will now give the following indications:

   - M: Solid Red
   - N: Solid Red
   - A: Off
   - D9: Solid Green
   - D10: Off

   Hold down S1 (approximately 5 seconds) until the LED's indicate the following:

   - M: Solid Green
   - N: Solid Green
   - A: Solid Green
   - D9: Solid Green
   - D10: Off

   Release S1.

3. Electrically, move the actuator toward the full open (RCS actuators) or extend (Andco actuators) position.

   Note: *If no local pilot devices are available, this may be accomplished by installing a jumper between terminal point 6 and terminal point 3 of terminal block J4. This will run the actuator to the full open (RCS actuators) or extend (Andco actuators) position.*

   As the actuator is moving the LED's on the DNET115V should give the following indications:
   - M: Solid Green
   - N: Solid Green
   - A: Flashing Red
   - D9: Off
   - D10: Red

   When the end of travel is reached and the limit switch activates, the actuator will stop and the LED's will give the following indications:
   - M: Solid Green
   - N: Solid Green
   - A: Solid Red
   - D9: Off
   - D10: Solid Red

4. Push down and hold S2 on the DNET115V. The LED's will now give the following indications:
   - M: Solid Red
   - N: Off
   - A: Solid Red
   - D9: Off
   - D10: Solid Red

   Hold down S1 until the LED's indicate the following:
   - M: Solid Green
   - N: Solid Green
   - A: Solid Red
   - D9: Off
   - D10: Solid Red

   Release S1.

The actuator is now ready for operation over the DeviceNet network. Reinstall the control enclosure, ensuring the gasket (NEMA 4 versions) is properly installed and all retaining bolts are tight.

2 Functional Specifications

2.1.1 Database

Variable	Type	C=64 I = 1 A=X	Description
StatusWord	UINT	3	Bit Mapped Actuator Status
AlarmWord	UINT	4	Bit Mapped Actuator Alarms
Position	INT	5	AI0 Scaled Value/Position
Spare AI	INT	6	AI2 Scaled Value
DeadBand	UINT	7	Actuator DeadBand
DiImage0	UCHAR	20	Voltage Sensing Input Image
DiImage1	UCHAR	21	Address Switch Image
DiImage2	UCHAR	22	Data Rate Switch Image
DiImage3	UCHAR	23	Push Buttons Image
Raw Position	UINT	24	Raw Position
Raw AI	UINT	25	Raw Analog Input
CommandWord	UINT	1	Bit Mapped Actuator Commands
Setpoint	INT	2	Remote Setpoint in same scale as the position
ControlWord	UINT	12	Bit Mapped Configuration Word
InstRevTime	UINT	13	Motor Direction Change Delay in 100ms resolution.
PosLo PosHi PosScale	INT INT FLOAT	14 15 16	Analog Input Configuration Variables
PosFailHi PosFailLo	INT INT	17 18	Position Valid Range
FailPosition	INT	19	Actuator Fail Position

2.2 Actuator Status Mapping

Bit	Description
0	Open Limit
1	Close Limit
2	Remote
3	Local
4	Actuator Running Open
5	Actuator Running Close
6	ESD Active
7	RSV
8	Motor Commanded Open
9	Motor Commanded Close
10-15	RSV

2.3 Actuator Alarm Mapping

Bit	Description
0-15	RSV

2.4 DI Image0 Mapping

Bit	Description
0	DI0
1	DI1
2	DI2
3	DI3
4	DI4
5	DI5
6	DI6
7	DI7

2.5 Command Word Mapping

Bit	Description
0	OPEN
1	CLOSE
2	STOP
3	REMOTE ESD
4-15	RSV

2.6 Control Word Mapping

Bit	Description
1-2	ESD
3	ON – Actuator On/Off Mode OFF – Actuator Setpoint Mode
4-13	Reserved

2.7 Emergency Shut Down

Action	Configuration
Fail to Preset	ESD = 3
Fail As Is	ESD = 0
Open	ESD = 1
Close	ESD = 2

2.8 Position Scaling

Position = INT { Adc0Scale * (RawAd0 – Adc0Lo) / (Adc0Hi – Adc0Lo)}
Note that the Remote Setpoint, Deadband, FailPosition are in units per Adc0Scale.

3 DeviceNet Device Profile

Note that all objects are specified in the DeviceNet specification with the exception of the user object class 64, which is specific to the DNET115V.

3.1 Identity Object: Class Code: 01 (0x01)

3.1.1 Identity Object Class Attributes

Attribute	Access	Name	Type	Value
1	Get	Revision	UINT	1
2	Get	Max Object Instance	UINT	1
6	Get	Max Class Identifier	UINT	7
7	Get	Max Instance Attribute	UINT	7

3.1.2 Identity Object, Instance 1 Attributes

Attribute	Access	Name	Type	Value
1	Get	Vendor	UINT	129
2	Get	Product Type	UINT	7
3	Get	Product Code	UINT	1
4	Get	Revision	STRUCT OF	
		Major Revision	USINT	1
		Minor Revision	USINT	1
5	Get	Device Status	UINT	See DN spec
6	Get	Serial Number	UINT	Unique to DNET115V
7	Get	Product Name	STRUCT OF	
		Length	USINT	7
		Name	STRING [6]	DNET115V

3.1.3 Common Services

Service Code	Class	Instance	Service Name
05 (0x05)	No	Yes	Reset
14 (0x0E)	Yes	Yes	Get_Attribute_Single

3.2 Router Object: Class Code: 02 (0x02)

3.2.1 Router Object Class Attributes

Attribute	Access	Name	Type	Value
1	Get	Revision	UINT	1
2	Get	Max Object Instance	UINT	1
6	Get	Max Class Identifier	UINT	7
7	Get	Max Instance Attribute	UINT	2

3.2.2 Router Object, Instance 1 Attributes

Attribute	Access	Name	Type	Value
2	Get	Number of Connections	UINT	2

3.2.3 Common Services

Service Code	Class	Instance	Service Name
14 (0x0E)	Yes	Yes	Get_Attribute_Single

3.3 DeviceNet Object: Class Code: 03 (0x03)

3.3.1 DeviceNet Object Class Attributes

Attribute	Access	Name	Type	Value
1	Get	Revision	UINT	2

3.3.2 DeviceNet Object, Instance 1 Attributes

Attribute	Access	Name	Type	Value
1	Get/Set	MACID	USINT	Switch/NV
2	Get/Set	Baud Rate	USINT	Switch/NV
3	Get/Set	Bus Off Interrupt	BOOL	See DN spec
4	Get/Set	Bus Off Counter	USINT	See DN spec
5	Get/Spc	Allocation Information	STRUCT of	See DN spec
		Choice Byte	BYTE	
		Master Node Addr.	USINT	
6	Get	MACID Changed	BOOL	See DN spec
7	Get	Baud Rate Changed	BOOL	See DN spec
8	Get	MACID Switch Value	USINT	See DN spec
9	Get	Baud Rate Switch Value	USINT	See DN spec

3.3.3 Common Services

Service Code	Class	Instance	Service Name
14 (0x0E)	Yes	Yes	Get_Attribute_Single
16 (0x10)	No	Yes	Set_Attribute_Single
75 (0x4B)	No	Yes	Allocate Master/Slave
76 (0x4C)	No	Yes	Release Master/Slave

3.4 Assembly Object: Class Code: 04 (0x04)

3.4.1 Assembly Object Class Attributes

Attribute	Access	Name	Type	Value
1	Get	Revision	UINT	2
2	Get	Max Instance	UINT	2

3.4.2 Assembly Object, Instance 1 Attributes

Attribute	Access	Name	Type	Value
3	Get	Input Data	STRUCT of	
		Status Word	UINT	See section 2
		Position	INT	See section 2

3.4.3 Assembly Object, Instance 2 Attributes

Attribute	Access	Name	Type	Value
3	Get/Set	Output Data	STRUCT of	
		Command Word	UINT	See section 2
		Setpoint Value	INT	See section 2

3.4.4 Common Services

Service Code	Class	Instance	Service Name
14 (0x0E)	Yes	Yes	Get_Attribute_Single
16 (0x10)	No	Yes	Set_Attribute_Single

3.5 Connection Object: Class Code: 05 (0x05)

3.5.1 Connection Object Class Attributes

Attribute	Access	Name	Type	Value
1	Get	Revision	UINT	1
2	Get	Max Object Instance	UINT	2
6	Get	Max Class Identifier	UINT	7
7	Get	Max Instance Attribute	UINT	17

3.5.2 Connection Object, Instance 1 Attributes (Explicit Message)

Attribute	Access	Name	Type	Value
1	Get	State	USINT	See DN spec
2	Get	Instance Type	USINT	0 = Explicit Message
3	Get	Transport Class Trigger	USINT	0x83
4	Get	Production Connection	UINT	See DN spec
5	Get	Consumed Connection	UINT	See DN spec
6	Get	Initial Comm. Char.	USINT	0x21
7	Get	Production Size	UINT	18
8	Get	Consumed Size	UINT	21
9	Get/Set	Expected Packet Rate	UINT	Default 2500 msec
12	Get/Set	Timeout Action	USINT	Default 0 See DN spec
13	Get	Prod. Path Length	USINT	0
14	Get	Production Path		(null)
15	Get	Cons. Path Length	USINT	0
16	Get	Consumed Path		(null)

3.5.3 Connection Object, Instance 2 Attributes (POLL connection)

Attribute	Access	Name	Type	Value
1	Get	State	USINT	See DN spec
2	Get	Instance Type	USINT	1 = I/O Message
3	Get	Transport Class Trigger	USINT	0x82
4	Get	Production Connection	UINT	See DN spec
5	Get	Consumed Connection	UINT	See DN spec
6	Get	Initial Comm. Char.	USINT	0x1
7	Get	Production Size	UINT	4
8	Get	Consumed Size	UINT	4
9	Get/Set	Expected Packet Rate	UINT	Default 2500 msec
12	Get/Set	Timeout Action	USINT	Default 2 See DN spec
13	Get	Prod. Path Length	USINT	6
14	Get	Production Path	STRUCT of	
		Log. Seg., Class	USINT	0x20
		Class Number	USINT	0x04
		Log.Seg., Instance	USINT	0x24
		Instance Number	USINT	0x01
		Log.Seg., Attribute	USINT	0x30
		Attribute Number	USINT	0x03
15	Get	Cons. Path Length	USINT	6
16	Get	Production Path	STRUCT of	
		Log. Seg., Class	USINT	0x20
		Class Number	USINT	0x04
		Log.Seg., Instance	USINT	0x24
		Instance Number	USINT	0x02
		Log.Seg., Attribute	USINT	0x30
		Attribute Number	USINT	0x03

3.5.4 Common Services

Service Code	Class	Instance	Service Name
05 (0x05)	Yes	Yes	Reset
14 (0x0E)	Yes	Yes	Get_Attribute_Single
16 (0x10)	No	Yes	Set_Attribute_Single

3.6 User Object (UC) Class Code: 64 (0x40)

3.6.1 VCO Object Class Attributes

Attribute	Access	Name	Type	Value
1	Get	Revision	UINT	1
2	Get	Max Object Instance	UINT	1
6	Get	Max Class Identifier	UINT	7
7	Get	Max Instance Attribute	UINT	25

3.6.2 VCO Object, Instance 1 Attributes

Attribute	Access	Name	Type	Value
1	Get/Set	CommandWord	UINT	See Section 2
2	Get/Set	Setpoint	INT	See Section 2
3	Get	Status Word	UINT	See Section 2
4	Get	Alarm Word	UINT	Reserved
5	Get	Position	INT	See Section 2
6	Get	Spare AI	INT	Reserved
7	Get/Set	Deadband	UINT	See Section 2
12	Get/Set	Control Word	UINT	See Section 2
13	Get/Set	Reversal Delay	UINT	100 ms Resolution See Section 2
14	Get/Set	Adc0Lo	UINT	See Section 2
15	Get/Set	Adc0Hi	UINT	See Section 2
16	Get/Set	Adc0Scale	REAL	See Section 2
19	Get/Set	Fail Position	INT	See Section 2
20	Get	DiImage0	USINT	See Section 2
23	Get	DiImage3	USINT	See Section 2
24	Get	ADC Channel 0	USINT	See Section 2
25	Get	ADC Channel 1	USINT	See Section 2

3.6.3 Common Services

Service Code	Class	Instance	Service Name
14 (0x0E)	Yes	Yes	Get_Attribute_Single
16 (0x10)	No	Yes	Set_Attribute_Single

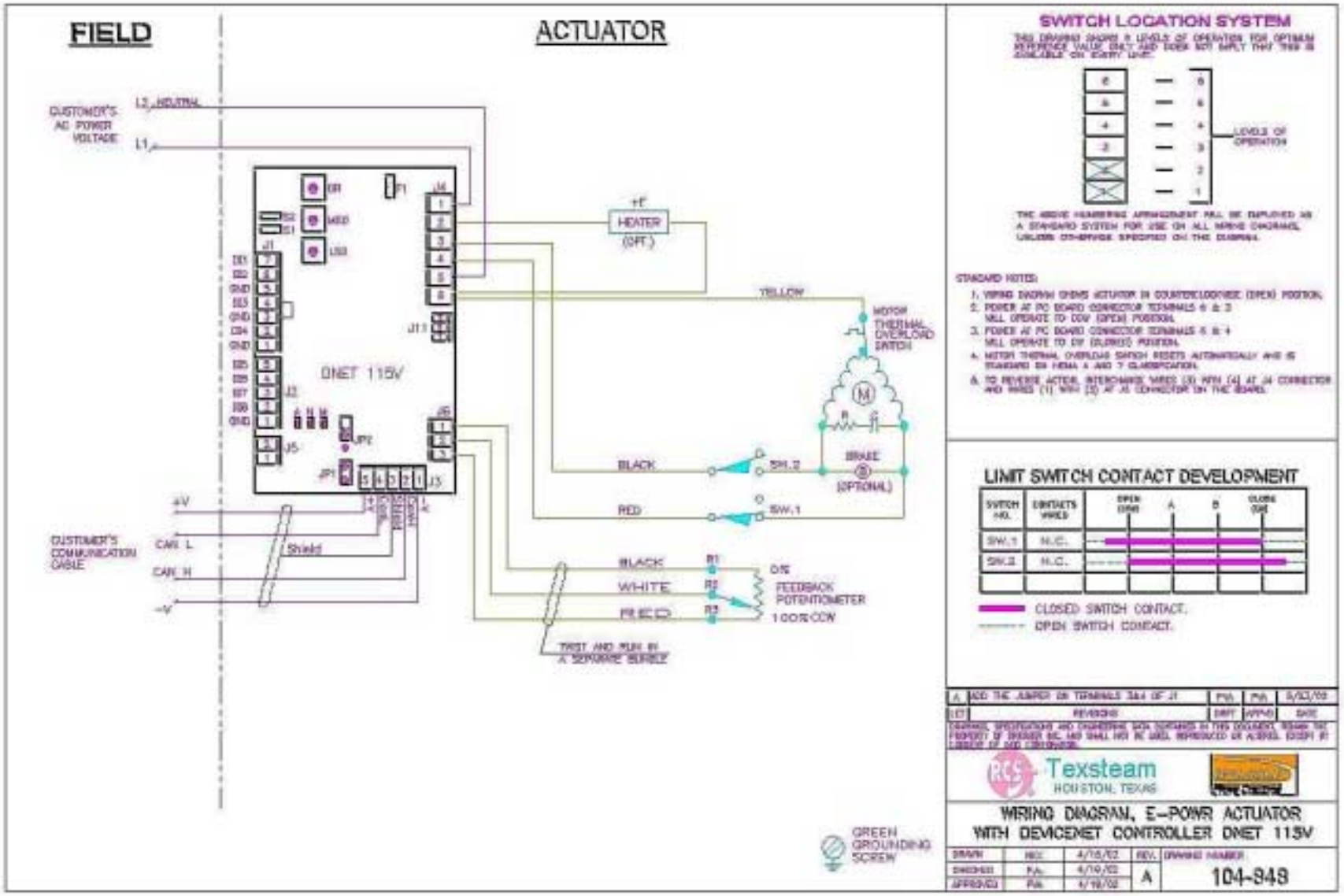
FIELD
ACTUATOR
CUSTOMER'S AC POWER VOLTAGE
L2 NEUTRAL
L1
DNET 115V
HEATER (OPT.)
YELLOW
MOTOR THERMAL OVERLOAD SWITCH
BLACK
SW.2
BRAKE (OPTIONAL)
RED
SW.1
+V
CAN L
Shield
CAN H
-V
CUSTOMER'S COMMUNICATION CABLE
BLACK
WHITE
RED
0%
FEEDBACK POTENTIOMETER
100% CCW
TWIST AND RUN IN A SEPARATE SERVICE
GREEN GROUNDING SCREW
SWITCH LOCATION SYSTEM
LEVELS OF OPERATION
STANDARD NOTES:
LIMIT SWITCH CONTACT DEVELOPMENT
SWITCH NO.
CONTACTS WIRES
OPEN
CLOSE
SW.1
N.C.
SW.2
N.C.
CLOSED SWITCH CONTACT.
OPEN SWITCH CONTACT.
A ADD THE JUMPER ON TERMINALS 3&4 OF J1
Texsteam
HOUSTON, TEXAS
WIRING DIAGRAM, E-POWR ACTUATOR WITH DEVICENET CONTROLLER DNET 115V
DRAWN
CHECKED
APPROVED
4/15/02
4/19/02
4/19/02
REV.
A
DRAWING NUMBER
104-948

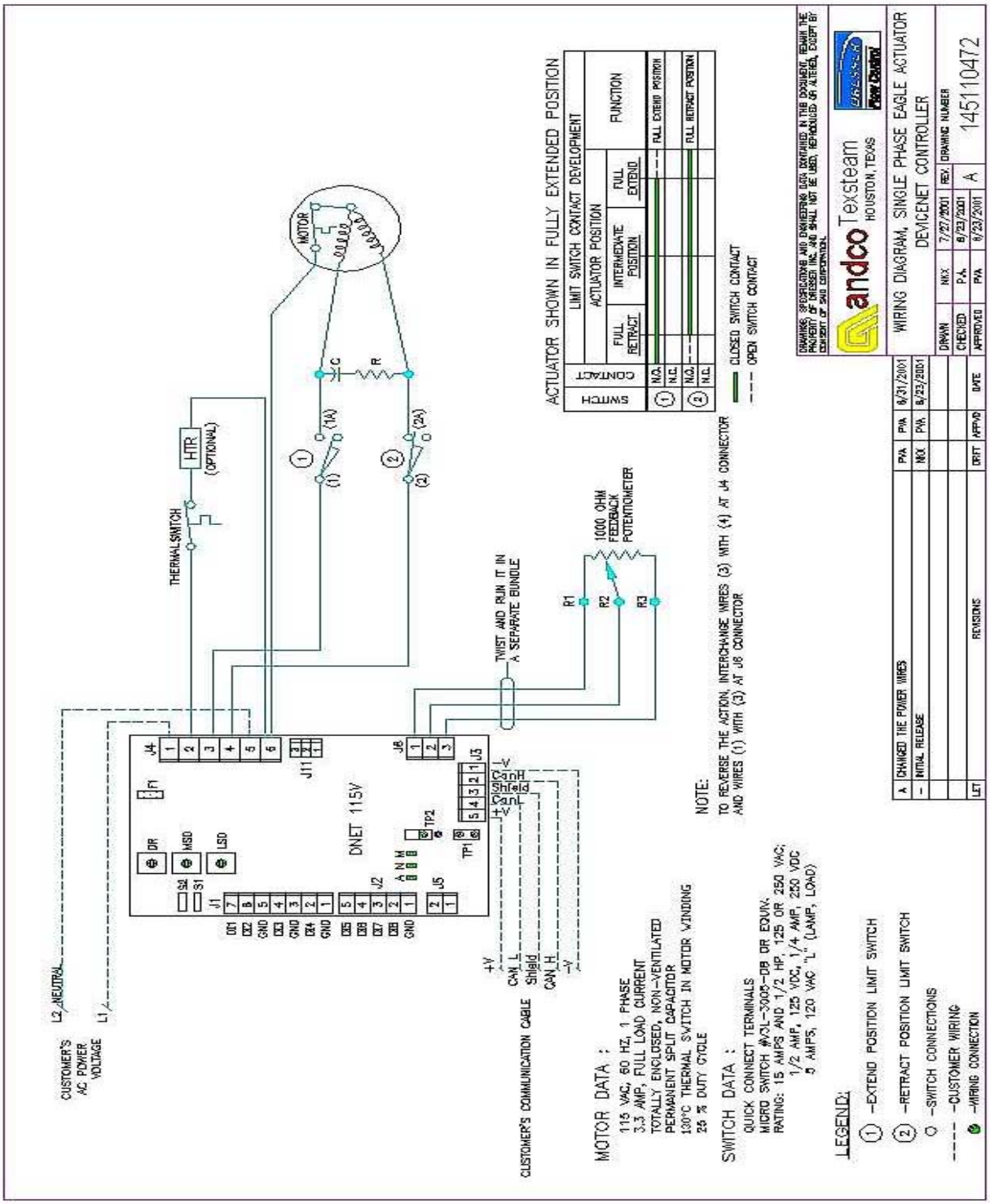
ACTUATOR SHOWN IN FULLY EXTENDED POSITION
LIMIT SWITCH CONTACT DEVELOPMENT
ACTUATOR POSITION
SWITCH
CONTACT
FULL RETRACT
INTERMEDIATE POSITION
FULL EXTEND
FUNCTION
FULL EXTEND POSITION
FULL RETRACT POSITION
CLOSED SWITCH CONTACT
OPEN SWITCH CONTACT
MOTOR
THERMALSWITCH
HTR (OPTIONAL)
1000 OHM FEEDBACK POTENTIOMETER
TWIST AND RUN IT IN A SEPARATE BUNDLE
DNET 115V
CUSTOMER'S AC POWER VOLTAGE
CUSTOMER'S COMMUNICATION CABLE
NOTE:
TO REVERSE THE ACTION, INTERCHANGE WIRES (3) WITH (4) AT J4 CONNECTOR AND WIRES (1) WITH (3) AT J6 CONNECTOR
MOTOR DATA :
115 VAC, 60 HZ, 1 PHASE
3.3 AMP, FULL LOAD CURRENT
TOTALLY ENCLOSED, NON-VENTILATED
PERMANENT SPLIT CAPACITOR
130°C THERMAL SWITCH IN MOTOR WINDING
25 % DUTY CYCLE
SWITCH DATA :
QUICK CONNECT TERMINALS
MICRO SWITCH #V3L-3005-DB OR EQUIV.
RATING: 15 AMPS AND 1/2 HP, 125 OR 250 VAC;
1/2 AMP, 125 VDC, 1/4 AMP, 250 VDC
5 AMPS, 120 VAC "L" (LAMP, LOAD)
LEGEND:
1 -EXTEND POSITION LIMIT SWITCH
2 -RETRACT POSITION LIMIT SWITCH
-SWITCH CONNECTIONS
-CUSTOMER WIRING
-WIRING CONNECTION
A CHANGED THE POWER WIRES PVA PVA 8/31/2001
- INITIAL RELEASE NKX PVA 8/23/2001
LET REVISIONS DRFT APPVD DATE
andco Texsteam
HOUSTON, TEXAS
WIRING DIAGRAM, SINGLE PHASE EAGLE ACTUATOR
DEVICENET CONTROLLER
DRAWN NKX 7/27/2001
CHECKED PVA 8/23/2001
APPROVED PVA 8/23/2001
REV. A
DRAWING NUMBER 145110472

Industrial Products Group
RCS and Andco Actuators
16240 Port Northwest Drive
Houston, TX 77041
T: 832-590-2306
Toll Free: 1-800-945-9898
F: 713-849-2879

© 2020 Natural Gas Solutions North America, LLC – All rights reserved. Natural Gas Solutions reserves the right to make changes in specifications and features shown herein, or discontinue the product described at any time without notice or obligation. Contact your Dresser Natural Gas Solutions representative for the most current information. The Dresser Logo and all Trademarks containing the term "Dresser" are the property of Dresser, LLC, a subsidiary of Baker Hughes, a GE Company.

DRESSER®
NATURAL GAS SOLUTIONS

www.dresserngs.com

RCS – Andco DeviceNet Electric Actuator Controller NGS.IPG.0053
09.20